TrynEx International, LLC, 531 Ajax Drive, Madison Heights, MI 48071-2429 • www.snowexproducts.com

October 15, 2026
Lit. No. 52312, Rev. 07

SnowEx®

Automatixx®
ATTACHMENT SYSTEM

8100, 8611

POWER PLOW™ Snowplow

Blade Assembly 77750, 77755
Big Box Assembly 77850

Parts List

AUTHENTIC SnowEx® PARTS & ACCESSORIES

A DIVISION OF DOUGLAS DYNAMICS, LLC

TABLE OF CONTENTS

8100/8611 POWER PLOW™ BLADE ASSEMBLIES 4
- 8100 Blade Components 4
- 8611 Blade Components 6

A-FRAME ASSEMBLY 8

HEADGEAR ASSEMBLY 10

HYDRAULIC AND ELECTRICAL COMPONENTS 12
- Hydraulic Unit 12
- Lift and Angle Rams 14
- Hoses and Fittings 15
- Electrical Components 16

VEHICLE-SIDE HARNESS DIAGRAM 17

HEADLAMPS 18

8100 Blade Components

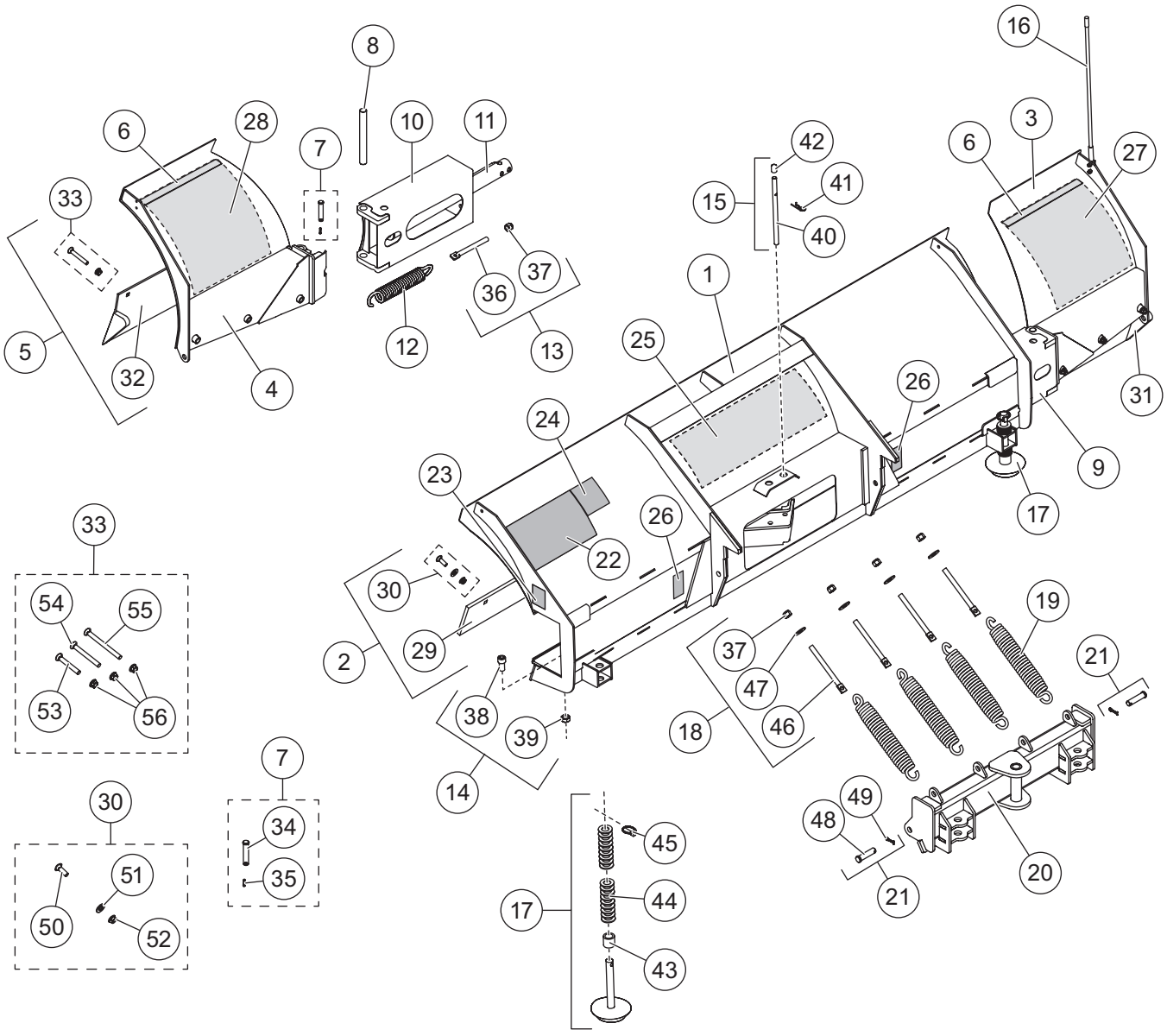

8100 POWER PLOW™ BLADE ASSEMBLY

77750 Blade Components							
Item	**Part**	**Qty**	**Description**	**Item**	**Part**	**Qty**	**Description**
1	84568	1	Moldboard	16	84525	1	24" Poly Blade Guide Kit (set of 2)
ns	84784	1	Service Moldboard Assembly (items 1–17, 22–28)	ns*	84477	1	36" Poly Blade Guide Kit (set of 2)
				17	49071	2	Disc Shoe Assembly
2	B52067	1	Moldboard Cutting Edge Kit	18	41132	4	5/8-11 x 7-3/8 Eyebolt Kit
3	84655	1	Blade Wing PP 8100 – PS	19	23039	4	Trip Spring
4	84654	1	Blade Wing PP 8100 – DS	20	84578	1	Quadrant 8100 PP
5	B51104	1	Wing Cutting Edge Kit – DS & PS	21	41123	2	Quadrant Pin Kit
6	50639	2	Wear Strip – Wing Top	22	52203	1	Label – Attach/Detach, Automatixx®
7	84683	2	Wing Pin Kit	23	29593	4	Label – Warning, Multiple Pinch Points
8	B55042	2	Wing Pivot Pin	24	59900	1	Label – Warning/Caution, Snowplows
9	84659	1	Slide Box – PS	25	77708	1	Label – Logo, POWER PLOW
10	84658	1	Slide Box – DS	26	29256	2	Label – Warning, Foot Crush Hazard
11	43803	2	Ram Assembly 1-1/2 x 13-15/16 DA	ns	84644	1	Blade Label Kit, 8100 POWER PLOW (items 22–26)
ns	43794	2	Seal Kit, Ram Assembly 43803				
12	B61167	2	3/8 x 2-5/8 x 12-1/2 Extension Spring	27	77709	1	Wing Label – PS
13	84661	2	Slide Box Eyebolt Kit	28	77711	1	Wing Label – DS
14	84662	2	Slide Box Bolt Kit	ns	77729	1	Wing Labels Kit 8100 (items 27 & 28)
15	84663	2	Slide Box Pin Kit	ns*	84519	1	Rubber Snow Deflector w/Hardware
Item 2			**B52067 Moldboard Cutting Edge Kit**				
29		1	1/2 Moldboard Cutting Edge	30	B61255	1	Cutting Edge Bolt Kit
Item 5			**B51104 Wing Cutting Edge Kit – DS & PS**				
31	B51047	1	Wing Cutting Edge – PS	33	B61431	1	POWER PLOW Wing Cutting Edge Bolt Kit
32	B51048	1	Wing Cutting Edge – DS				
Item 7			**84683 Wing Pin Kit**				
34		1	5/8 x 3 Clevis Pin	35		1	1/4 x 1-1/2 Cotter Pin
Item 13			**84661 Slide Box Eyebolt Kit**				
36		1	5/8-11 x 4-3/8 Spade Bolt	37		1	5/8-11 Hex Locknut GB
Item 14			**84662 Slide Box Bolt Kit**				
38		1	3/4-10 x 1-1/2 Socket Head Cap Screw	39		1	3/4-10 Hex Locknut G8
Item 15			**84663 Slide Box Pin Kit**				
40		1	Slide Box Extend/Retract Pin	42		1	5/8 ID x 3/4 OD x 1 Black Vinyl Cap
41		1	1/8 x 2-5/8 Hairpin Cotter				
Item 17			**49071 Disc Shoe Assembly**				
43	60045	1	1-1/8 ID x 1-5/8 OD x 1-1/2 Spacer	45	93010	1	7/16 x 1-3/4 Linchpin
44	91192	24	1" Flat Washer Special				
Item 18			**41132 5/8-11 x 7-3/8 Eyebolt Kit**				
37		1	5/8-11 Hex Locknut GB	47		1	5/8 Hardened Flat Washer
46		1	5/8-11 x 7-3/8 Spade Bolt GZ				
Item 21			**41123 Quadrant Pin Kit**				
48		1	3/4 x 3 Clevis Pin G8	49		1	1/4 x 1-1/2 Cotter Pin
Item 30			**B61255 Cutting Edge Bolt Kit**				
50		7	1/2-13 x 1-3/4 Carriage Bolt G8	52		7	1/2-13 Hex Locknut GB
51		7	1/2 Hardened Flat Washer				
Item 33			**B61431 POWER PLOW Wing Cutting Edge Bolt Kit**				
53		2	1/2-13 x 3-1/2 Carriage Bolt G8	55		2	1/2-13 x 5-3/4 Carriage Bolt G8
54		2	1/2-13 x 4-1/2 Carriage Bolt G8	56		6	1/2-13 Flanged Locknut
ns = not shown							G = Grade

* Accessory only.

8611 Blade Components

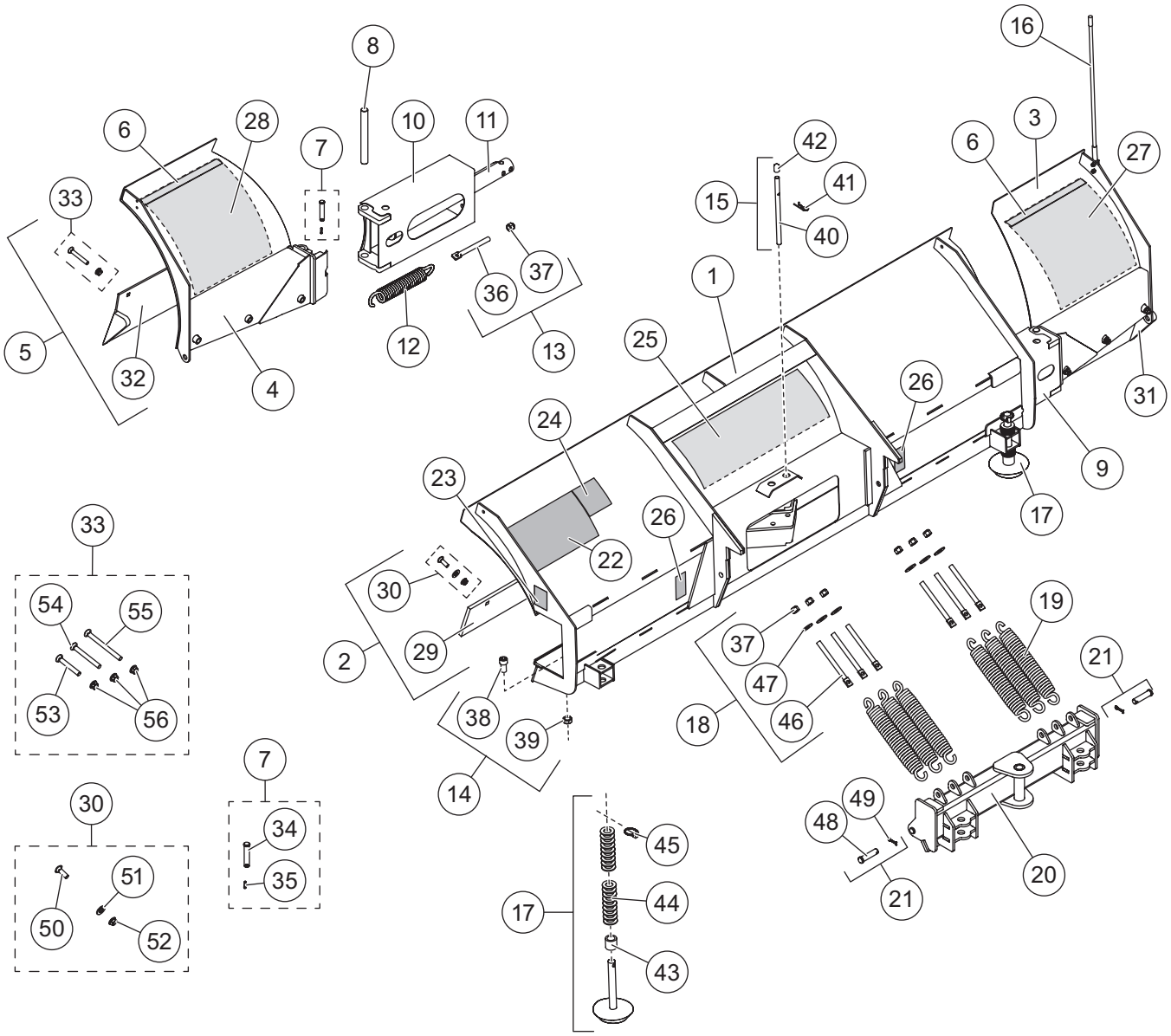

8611 POWER PLOW™ BLADE ASSEMBLY

77755 Blade Components							
Item	**Part**	**Qty**	**Description**	**Item**	**Part**	**Qty**	**Description**
1	84569	1	Moldboard	16	84525	1	24" Poly Blade Guide Kit (set of 2)
ns	84809	1	Service Moldboard Assembly (items 1–17, 22–28)	ns*	84477	1	36" Poly Blade Guide Kit (set of 2)
				17	49071	2	Disc Shoe Assembly
2	B52095	1	Moldboard Cutting Edge Kit	18	41132	6	5/8-11 x 7-3/8 Eyebolt Kit
3	84657	1	Blade Wing PP 8611 – PS	19	23039	6	Trip Spring
4	84656	1	Blade Wing PP 8611 – DS	20	84579	1	Quadrant 8611 PP
5	B61687	1	Wing Cutting Edge Kit – DS & PS	21	41123	2	Quadrant Pin Kit
6	50639	2	Wear Strip – Wing Top	22	52203	1	Label – Attach/Detach, Automatixx®
7	84683	2	Wing Pin Kit	23	32593EN	4	Label – Warning, Multiple Pinch Points
8	B55042	2	Wing Pivot Pin	24	59900	1	Label – Warning/Caution, Snowplows
9	84659	1	Slide Box – PS	25	77708	1	Label – Logo, POWER PLOW
10	84658	1	Slide Box – DS	26	29256	2	Label – Warning, Foot Crush Hazard
11	43802	2	Ram Assembly 1-3/4 x 18-7/16 DA	ns	84645	1	Blade Label Kit, 8611 POWER PLOW (items 22–26)
ns	43793	2	Seal Kit, Ram Assembly 43802				
12	B61167	2	3/8 x 2-5/8 x 12-1/2 Extension Spring	27	77713	1	Label – POWER PLOW Wing, PS
13	84661	2	Slide Box Eyebolt Kit	28	77712	1	Label – POWER PLOW Wing, DS
14	84662	2	Slide Box Bolt Kit	ns	77731	1	Wing Labels Kit 8611 (items 27 & 28)
15	84663	2	Slide Box Pin Kit	ns*	84520	1	Rubber Snow Deflector w/Hardware
Item 2			**B52095 Moldboard Cutting Edge Kit**				
29		1	1/2 Moldboard Cutting Edge	30	B61255	1	Cutting Edge Bolt Kit
Item 5			**B61687 Wing Cutting Edge Kit – DS & PS**				
31	B55007	1	Wing Cutting Edge – PS	33	B61431	1	POWER PLOW Wing Cutting Edge Bolt Kit
32	B55006	1	Wing Cutting Edge – DS				
Item 7			**84683 Wing Pin Kit**				
34		1	5/8 x 3 Clevis Pin	35		1	1/4 x 1-1/2 Cotter Pin
Item 13			**84661 Slide Box Eyebolt Kit**				
36		1	5/8-11 x 4-3/8 Spade Bolt	37		1	5/8-11 Hex Locknut GB
Item 14			**84662 Slide Box Bolt Kit**				
38		1	3/4-10 x 1-1/2 Socket Head Cap Screw	39		1	3/4-10 Hex Locknut G8
Item 15			**84663 Slide Box Pin Kit**				
40		1	Slide Box Extend/Retract Pin	42		1	5/8 ID x 3/4 OD x 1 Black Vinyl Cap
41		1	1/8 x 2-5/8 Hairpin Cotter				
Item 17			**49071 Disc Shoe Assembly**				
43	60045	1	1-1/8 ID x 1-5/8 OD x 1-1/2 Spacer	45	93010	1	7/16 x 1-3/4 Linchpin
44	91192	24	1" Flat Washer Special				
Item 18			**41132 5/8-11 x 7-3/8 Eyebolt Kit**				
37		1	5/8-11 Hex Locknut GB	47		1	5/8 Hardened Flat Washer
46		1	5/8-11 x 7-3/8 Spade Bolt GZ				
Item 21			**41123 Quadrant Pin Kit**				
48		1	3/4 x 3 Clevis Pin G8	49		1	1/4 x 1-1/2 Cotter Pin
Item 30			**B61255 Cutting Edge Bolt Kit**				
50		7	1/2-13 x 1-3/4 Carriage Bolt G8	52		7	1/2-13 Hex Locknut GB
51		7	1/2 Hardened Flat Washer				
Item 33			**B61431 POWER PLOW Wing Cutting Edge Bolt Kit**				
53		2	1/2-13 x 3-1/2 Carriage Bolt G8	55		2	1/2-13 x 5-3/4 Carriage Bolt G8
54		2	1/2-13 x 4-1/2 Carriage Bolt G8	56		6	1/2-13 Flanged Locknut
ns = not shown							G = Grade

* Accessory only.

A-Frame Components

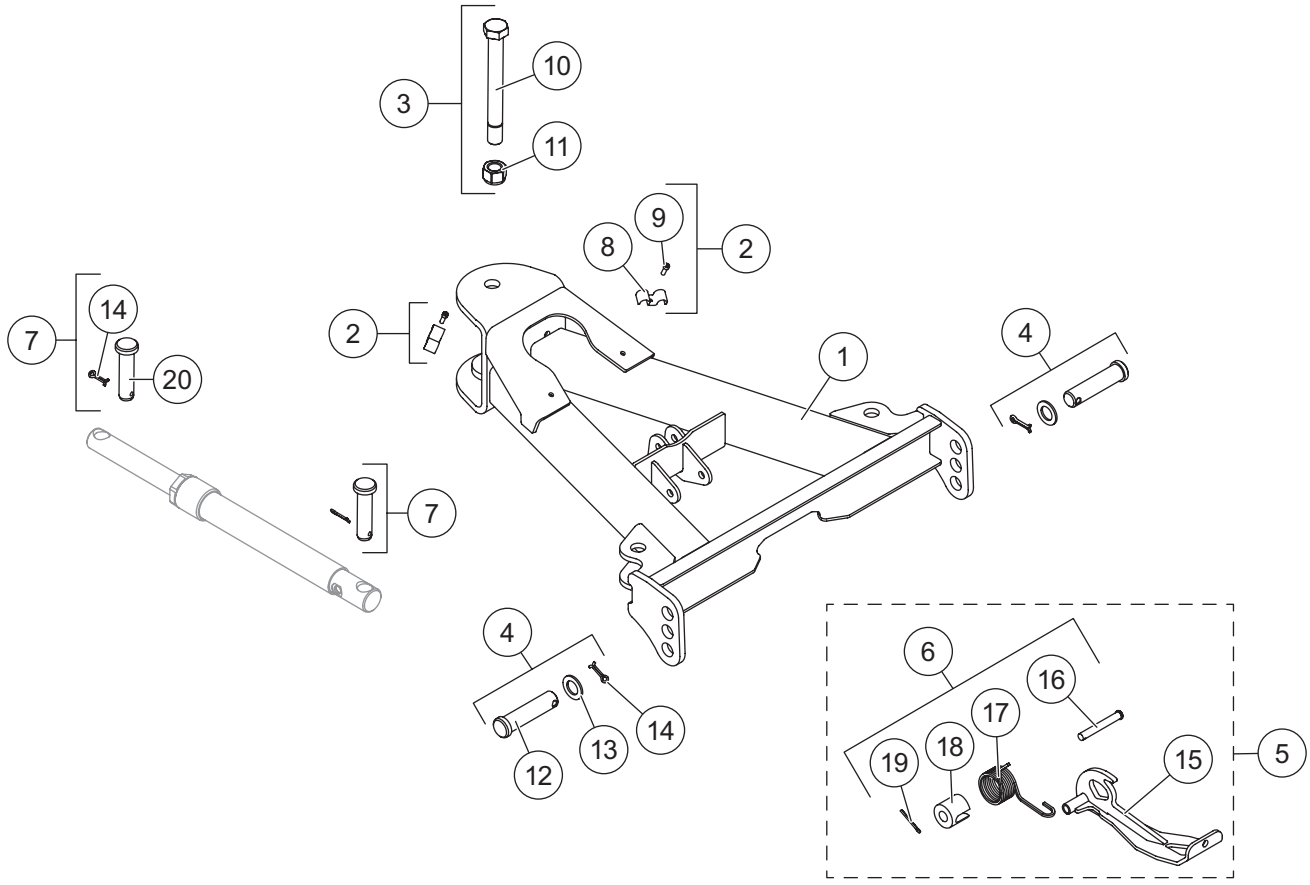

A-FRAME ASSEMBLY

A-Frame Components							
Item	**Part**	**Qty**	**Description**	**Item**	**Part**	**Qty**	**Description**
1	84591	1	A-Frame	5	84593	1	Stand Kit
2	49479-1	2	Hose Bracket Kit	6	84615	1	Stand Hardware Kit
3	49768	1	Pivot Bolt Kit	7	57968	4	1 x 4 Clevis Pin Kit
4	84623	2	A-Frame Pin Kit				
Item 2			**49479-1 Hose Bracket Kit**				
8		1	Hose Bracket	9		1	1/4-20 x 1-1/4 Socket Head Cap Screw
Item 3			**49768 Pivot Bolt Kit**				
10		1	1-8 x 9 Hex Cap Screw Special G5	11		1	1-8 Hex Locknut GB
Item 4			**84623 A-Frame Pin Kit**				
12		1	1 x 4-3/4 Clevis Pin	14		1	1/4 x 1-1/2 Cotter Pin
13		1	1" Flat Washer Special				
Item 5			**84593 Stand Kit**				
6	84615	1	Stand Hardware Kit	15		1	Stand
Item 6			**84615 Stand Hardware Kit**				
16		1	1/2 x 3-11/16 Clevis Pin	18		1	Stand Spring Spacer
17		1	Stand Torsion Spring	19		1	5/32 x 1-1/2 Cotter Pin
Item 7			**57968 1 x 4 Clevis Pin Kit**				
14		1	1/4 x 1-1/2 Cotter Pin	20		1	1 x 4 Clevis Pin
G = Grade							

Headgear Components

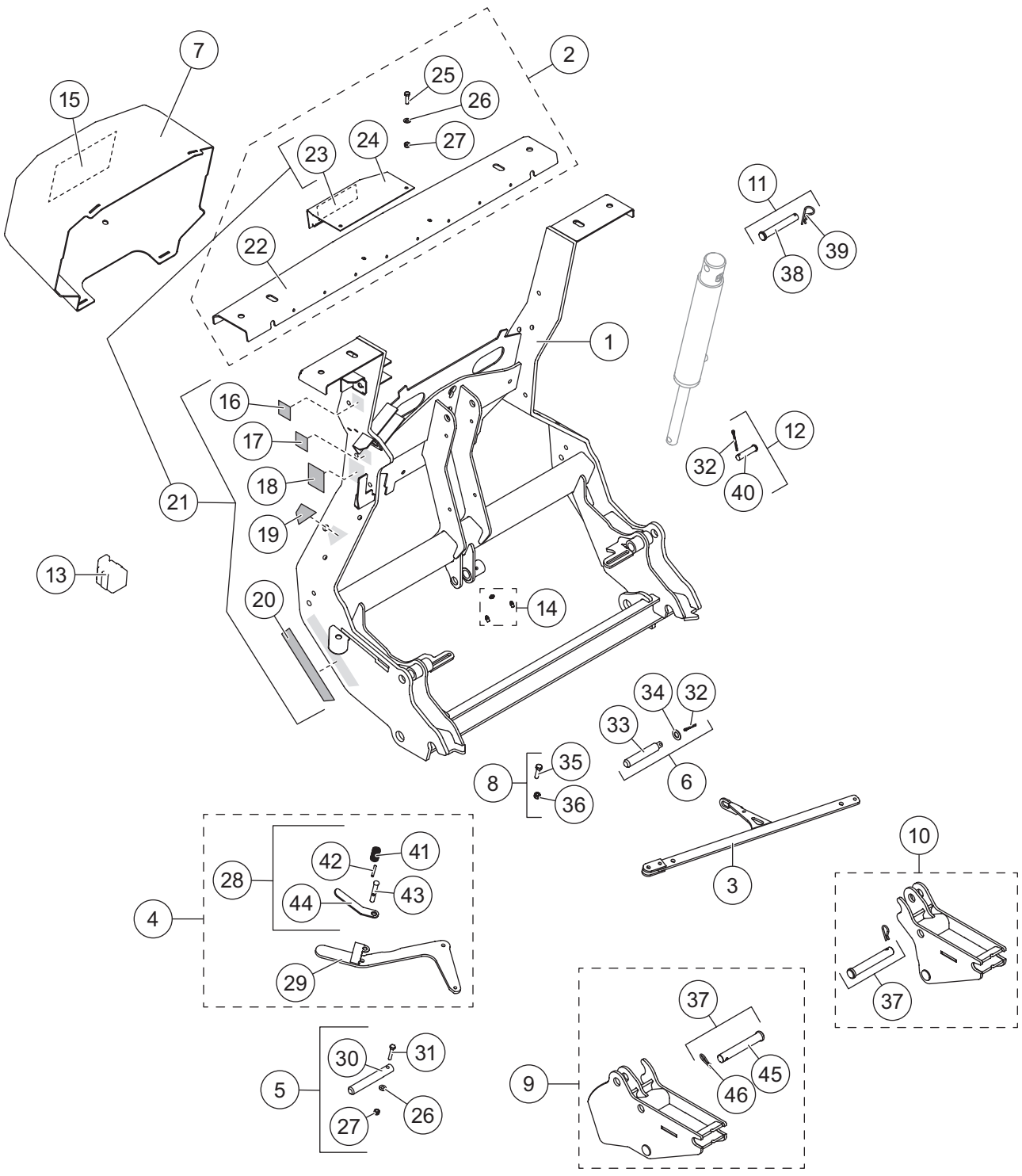

HEADGEAR ASSEMBLY

Headgear Components							
Item	**Part**	**Qty**	**Description**	**Item**	**Part**	**Qty**	**Description**
1	84622	1	Headgear (incl. item 14)	11	84632	1	Lift Ram Base Pin Kit
2	84624	1	Light Bar Channel	12	84627	1	Lift Ram Rod Pin Kit
3	84599	1	Link Arm	13	61246	1	Cable Boot
4	84595	1	Attach Handle Kit	14	84616	1	Grease Zerk (pkg of 3)
5	84603	2	Attach Pin Kit	15	43860	1	Label – Information, Hydraulic – PP
6	84601	1	Link Arm Jack Stand Pin Kit	16	52206	1	Label – Power Switch, Automatixx®
7	84651	1	Hydraulic Cover – PP (incl. item 15)	17	52207	1	Label – Operation Switch, Automatixx
8	84635	1	Link Arm/Attach Handle Fastener Kit	18	69689	1	Label – Logo, SECURITY GUARD™
9	84608	1	Receiver Kit – DS (incl. item 37)	19	77717	1	Label – Automatixx, Upper
ns	85121*	1	Receiver Kit, Tall – DS	20	77719	1	Label – Automatixx, Lower
10	84609	1	Receiver Kit – PS (incl. item 37)	21	84647	1	Headgear Label Kit
ns	85122*	1	Receiver Kit, Tall – PS				
Item 2			**84624 Light Bar Channel**				
22		1	Light Bar	25		2	1/4-20 x 1 Hex Cap Screw G5
23	77727	1	Label – Logo, SnowEx® Light Bar	26		2	1/4 Flat Washer
24		1	Light Bar Top Plate, Center	27		2	1/4-20 Hex Locknut GB
Item 4			**84595 Attach Handle Kit**				
28	84596	1	Attach Handle Release Cam Kit	29	84779	1	Handle
Item 5			**84603 Attach Pin Kit**				
26		1	1/4 Flat Washer	30		1	Hitch Pin
27		1	1/4-20 Hex Locknut GB	31		1	1/4-20 x 1-1/2 Hex Cap Screw SS
Item 6			**84601 Link Arm Jack Stand Pin Kit**				
32		1	5/32 x 1-1/2 Cotter Pin	34		1	1/2 Flat Washer Type B Narrow SS
33		1	Stand Actuator Pin				
Item 8			**84635 Link Arm/Attach Handle Fastener Kit**				
35		1	5/16-18 x 1-1/4 Hex Cap Screw G5	36		1	5/16-18 Hex Locknut GB
Item 9			**84608 Receiver Kit – DS (shown) / 85121* Receiver Kit Tall – DS (not shown)**				
		1	DS Receiver	37	84611	1	Receiver Pin Kit
Item 10			**84609 Receiver Kit – PS (shown) / 85122* Receiver Kit Tall – PS (not shown)**				
		1	PS Receiver	37	84611	1	Receiver Pin Kit
Item 11			**84632 Lift Ram Base Pin Kit**				
38		1	5/8 x 4-1/4 Clevis Pin	39		1	1/8 Hairpin Cotter
Item 12			**84627 Lift Ram Rod Pin Kit**				
32		1	5/32 x 1-1/2 Cotter Pin	40		1	1/2 x 2-1/8 Clevis Pin HT
Item 21			**84647 Headgear Label Kit**				
16	52206	1	Label – Power Switch, Automatixx	19	77717	1	Label – Automatixx, Upper
17	52207	1	Label – Operation Switch, Automatixx	20	77719	1	Label – Automatixx, Lower
18	69689	1	Label – Logo, SECURITY GUARD	23	77727	1	Label – Logo, SnowEx® Light Bar
Item 28			**84596 Attach Handle Release Cam Kit**				
41		1	Stand Lock Pin Spring	43		1	Handle Lock Pin
42		1	3/16 x 1-3/8 Roll Pin SS	44		1	Handle Lock Pin Lever
Item 37			**84611 Receiver Pin Kit**				
45	95739	1	3/4 x 5 Clevis Pin HT	46	42142	1	R-Pin Cotter
ns = not shown			SS = Stainless Steel	HT = Heat Treated			G = Grade

* Refer to the POWER PLOW™ Snowplow Installation Instructions to confirm when tall receivers are required.

Hydraulic Unit Components

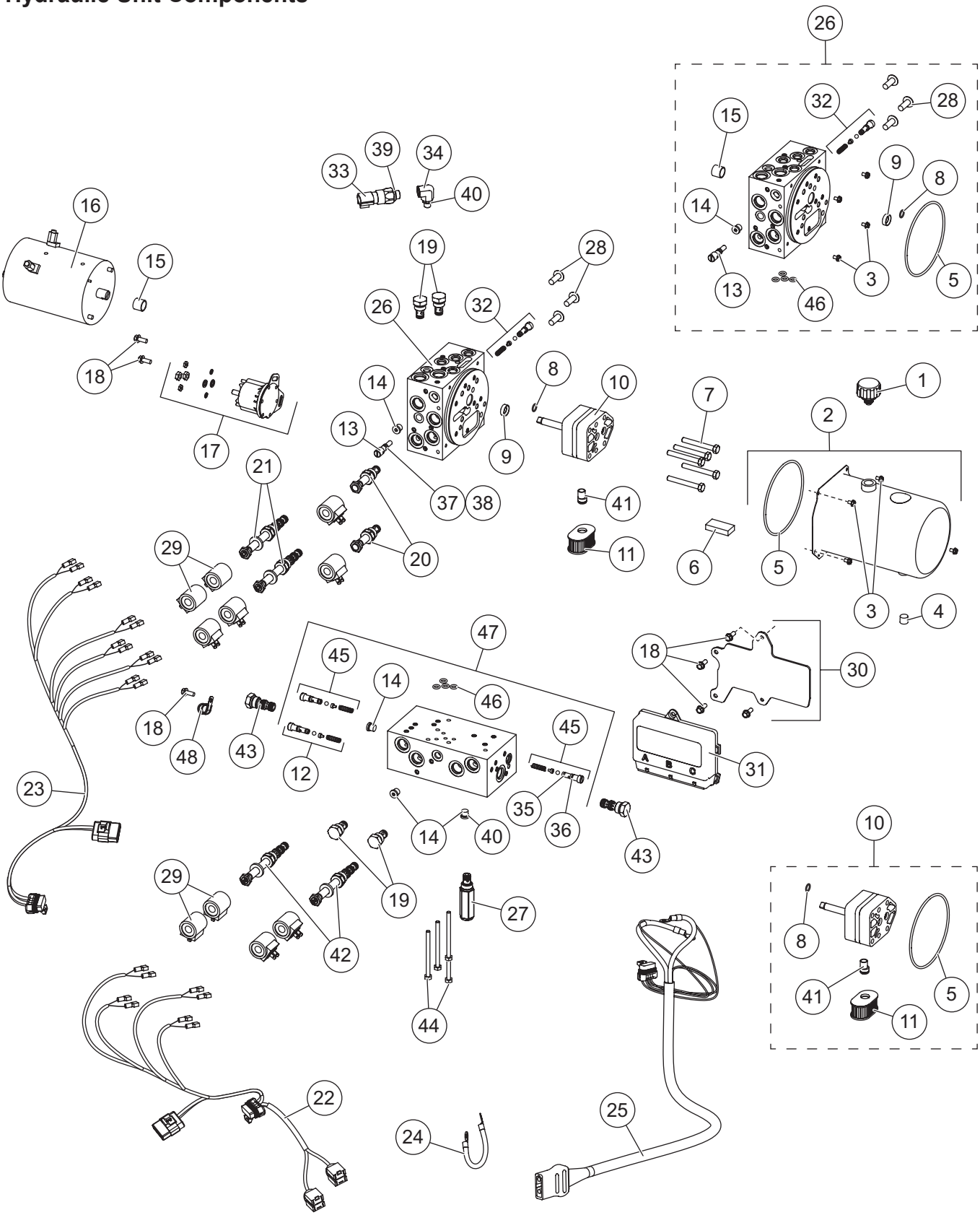

52647 Hydraulic Unit							
Item	**Part**	**Qty**	**Description**	**Item**	**Part**	**Qty**	**Description**
1	48278	1	Breather	26	52259	1	Manifold Assembly w/o Valves PP
2	49486	1	Reservoir Kit	27	42889	1	Relief Valve 4000 psi
3	66607	4	#10-24 x 5/16 Machine Screw	28	98043	3	3/8-16 x 1 Button Cap Screw
4	92095	1	Plug, Hex Socket 1/4 NPTF	29	52294	10	Coil
5	66519	1	O-Ring 2-250	30	52293	1	Module Plate
6	73897	1	Magnet	31	52292-2	1	Module – Plow Control
7	90080	5	5/16-18 x 2-1/2 Hex Cap Screw G5	32	52284	1	Relief Valve (1 set)
8	56274	1	O-Ring -013	33	52296	1	Pressure Switch (incl. item 39)
9*	66515	1	Pump Shaft Seal	34	52295	1	Elbow, 90° –4 M ORB/–6 F ORB (incl. item 40)
ns	52252	1	Seal Repair Tool Kit w/Seal				
10	49487	1	Hydraulic Pump Kit	35	55371	4	O-Ring -008
11	48281	1	Filter	36	25731	4	O-Ring -010
12	52282	1	Relief Valve (1 set)	37	48239	1	O-Ring -106
13	48517	1	Quill (includes items 37 & 38)	38	48240	1	Back-Up O-Ring -106
14	44344	4	Plug, Hex Socket –4 M ORB	39	56569	1	O-Ring -906
15†	56364	1	Bearing Sleeve	40	44343	5	O-Ring -904
ns	52251	1	Bearing Repair Tool Kit w/Bearing	41	10887	1	Fitting, Hydraulic Pump Inlet
16	52281	1	Motor	42	52286	2	Valve 4-Way 3-Pos. w/Nut & Spacer
17	52290	1	Motor Relay Kit, FLEET FLEX System	43	49488	2	Valve 3-Way PO Check
18	44355	7	1/4-20 x 5/8 Hex Washer-Head Thread-Rolling Screw	44	90696	4	1/4-20 x 3-1/2 Hex Cap Screw G5
				45	52283	1	Relief Valve (2 sets)
19	84934	2	Check Valve	46	43818	4	O-Ring -109
20	84936	2	Valve, 2-Way NC w/Rev Flow	47	52261	1	Secondary Manifold Assy w/o Valves
21	52285	1	Valve, 4-Way, 3-Position, Closed Ctr	48	65340	1	Clamp Loop #10
22	52108	1	Plow Control Harness, 4-Coil	49	84937	1	Valve, 4-Way, 3-Position
23	52079	1	Plow Control Harness, 6-Coil	50	48287	2	Check Valve
24	29071	1	Cable Assembly, 8" – Red	ns		3	Fuse, 5A Mini Automotive-Style (for items 22 & 23)
25	52291	1	Plow Battery Cable				
Item 2			**49486 Reservoir Kit**				
3	66607	4	#10-24 x 5/16 Machine Screw	5	66519	1	O-Ring 2-250
4	92095	1	Plug, Hex Socket 1/4 NPTF				
Item 10			**49487 Hydraulic Pump Kit**				
5	66519	1	O-Ring 2-250	41	10887	1	Fitting, Hydraulic Pump Inlet
8	56274	1	O-Ring -013	ns		1	Alignment Ring
11	48281	1	Filter	ns		1	Pump Shaft Tool
Item 26			**52259 Manifold Assembly w/o Valves PP**				
3	66607	4	#10-24 x 5/16 Machine Screw	14	44344	1	Plug, Hex Socket –4 M ORB
5	66519	1	O-Ring 2-250	15	56364	1	Bearing Sleeve
8	56274	1	O-Ring -013	28	98043	3	3/8-16 x 1 Button Cap Screw
9	66515	1	Pump Shaft Seal	32	52284	1	Relief Valve (1 set)
13	48517	1	Quill	46	43818	4	O-Ring -109
Item 47			**52261 Secondary Manifold Assembly w/o Valves**				
12	52282	1	Relief Valve (1 set)	45	52283	1	Relief Valve (2 sets)
14	44344	3	Plug, Hex Socket –4 M ORB	46	43818	4	O-Ring -109
O-Ring Service Kits							
–	52298	–	O-Ring Kit	–	48310	–	Seal Kit, 2-Way Valves
–	48309	–	Seal Kit, 3-Way & 4-Way Valves				
ns = not shown F = Female M = Male G = Grade							

* Use 52252 tool to install.

† Use 52251 tool to install.

Go to *www.snowexproducts.com* for hydraulic unit service information and specifications.

Lift and Angle Ram Components

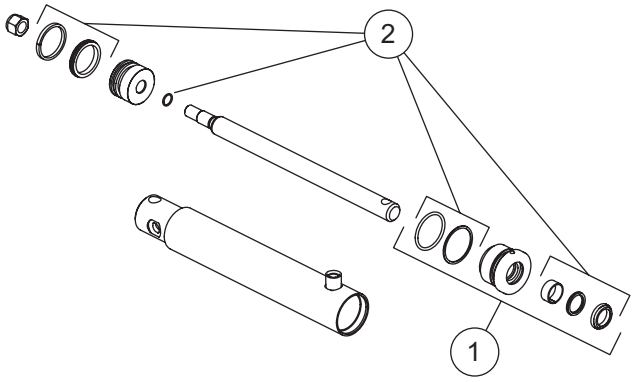

90910 Lift Ram Assembly 2 x 9-3/4 DA (Black) 84420* Lift Ram Assembly 2 x 9-3/4 DA (Red)			
Item	**Part**	**Qty**	**Description**
1	49499	1	1" Gland Assembly
2	48520	1	Seal Kit 2" DA Ram

* Discontinued

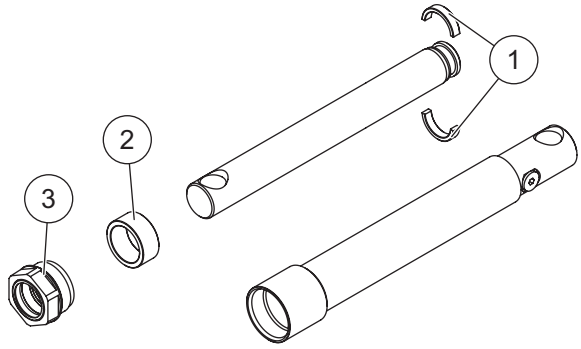

100259 Angle Ram Assembly 1-1/2 x 12 (Black) 84421* Angle Ram Assembly 1-1/2 x 12 (Red)			
Item	**Part**	**Qty**	**Description**
1	57879	1	Split Bearing Kit
2	56537	1	Spacer
3	48985	1	Gland Nut Assembly

* Discontinued

Hoses and Fittings

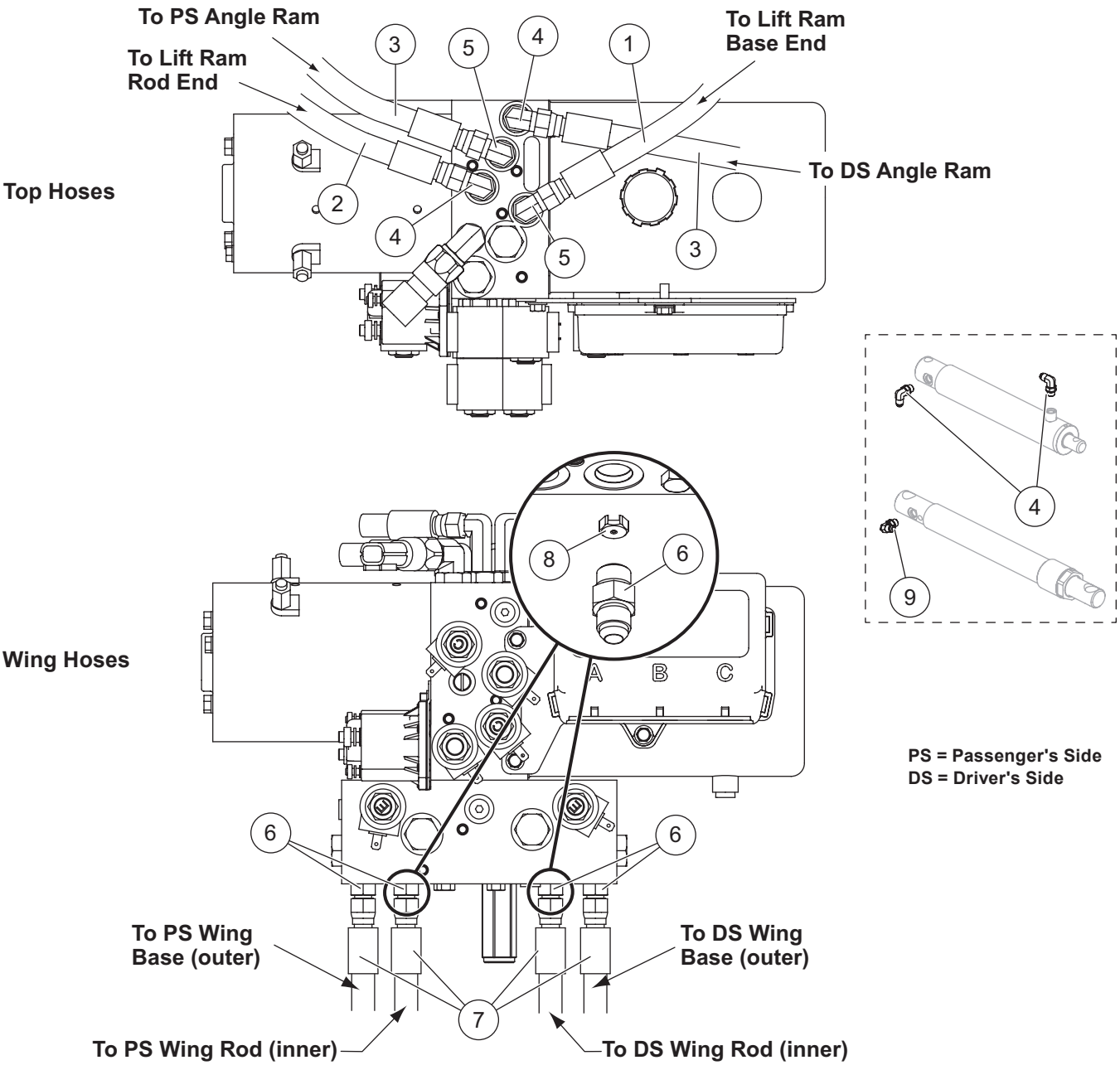

Hoses and Fittings							
Item	Part	Qty	Description	Item	Part	Qty	Description
1	84446	1	Hose, 1/4 x 14 w/F JIC Ends	6	B60007	4	Connector, Short –6 M JIC/ –6 M ORB
2	84453	1	Hose, 1/4 x 20 w/F JIC Ends				
3	52304	2	Hose, 3/8 x 36 w/F JIC Ends	7	52279	4	Hose, 3/8 x 45 w/F JIC ends
4	40571	4	Elbow, 90° –6 M JIC/–6 M ORB	8	52297	2	Orifice Plate
5	40572	2	Elbow, Extra Long 90° –6 M JIC/ –6 M ORB	9	77929	1	Elbow, 90° –6 M JIC/–6 M ORB w/Screen
ns	56823	5	Hose Wrap				
F = Female			ns = not shown				M = Male

Electrical Components

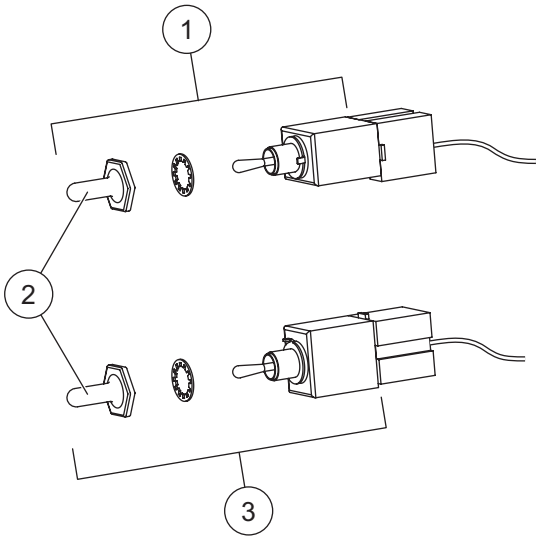

Plow-Side Electrical Components							
Item	**Part**	**Qty**	**Description**	**Item**	**Part**	**Qty**	**Description**
1	40575	1	Toggle Switch (MOM-ON, OFF, ON)	3	40576	1	Toggle Switch (MOM-ON, OFF, MOM-ON)
2	48259	2	Switch Boot				
Vehicle-Side Electrical Components							
*	72527	1	Vehicle Battery Cable	ns	48325	2	Plug Cover
*	28587	1	Vehicle Control Harness				
ns = not shown							

* For diagram see Vehicle-Side Harness Diagram.

Vehicle-Side Harness Diagram

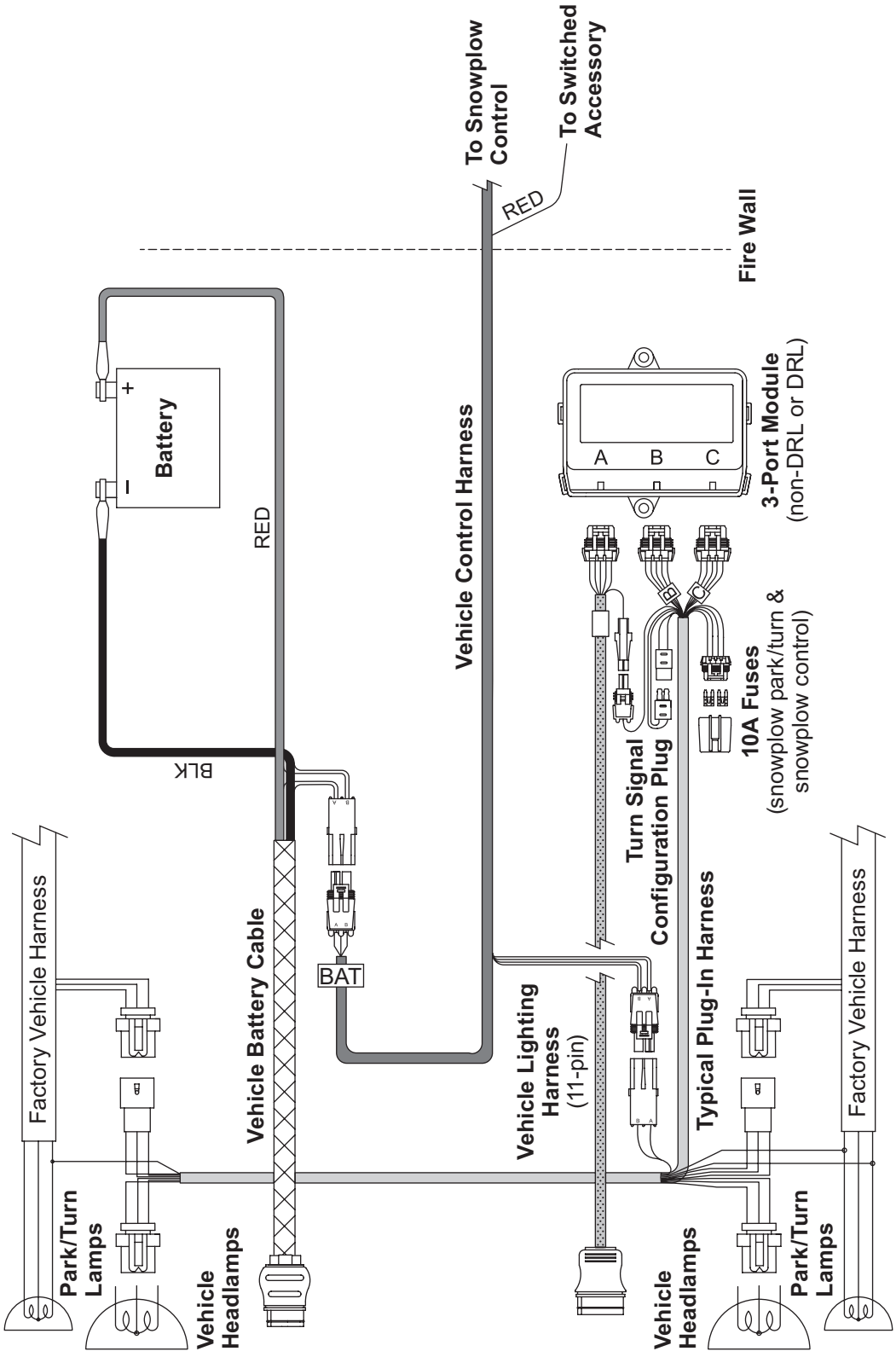

Headlamp Components

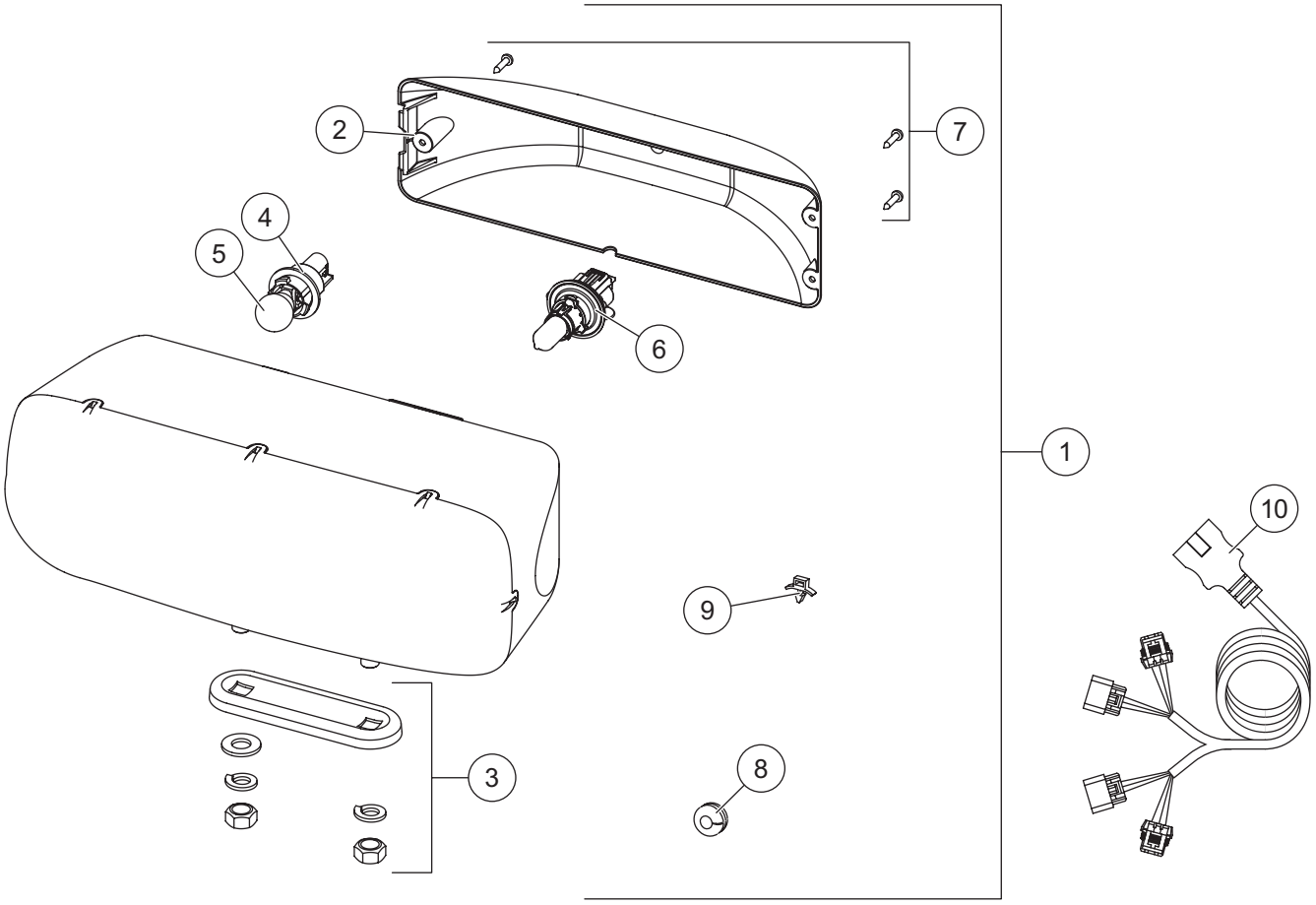

28800-1 Headlamp Kit (Pair)							
Item	**Part**	**Qty**	**Description**	**Item**	**Part**	**Qty**	**Description**
1	28802-1	1	Headlamp Service Kit – PS	6	28806	2	Headlamp Bulb Service Kit H13
ns	28801-1	1	Headlamp Service Kit – DS	7	28808-1	2	Cover Screws Service Kit (3 screws)
2	28803-1	2	Rear Cover Kit (fits 2- or 3-screw)	8	66130	2	Rubber Grommet
3	28804	2	Mounting Hardware Kit	9	56595	8	Cable Tie Anchor
4	28805	2	Park/Turn Socket Service Kit	10	28213K	1	Harness Service Kit
5		2	Park/Turn Bulb (trade no. 4157NAK)				
ns = not shown							

TrynEx International, LLC
531 Ajax Drive
Madison Heights, MI 48071-2429
www.snowexproducts.com

A DIVISION OF DOUGLAS DYNAMICS, LLC

Copyright © 2026 Douglas Dynamics, LLC. All rights reserved. This material may not be used, reproduced, or copied in any manner, in whole or in part, in any printed, mechanical, electronic, film, or other distribution and storage media, nor analyzed or manipulated in any manner for the purpose of training artificial intelligence technologies or systems, without the written consent of TrynEx International, LLC. In accordance with Article 4(3) of the Digital Single Market Directive 2019/790, TrynEx International expressly reserves this work from the text and data mining exception. Authorization to photocopy items for internal or personal use by TrynEx International outlets or equipment owner is granted.

TrynEx International reserves the right under its product improvement policy to change construction or design details and furnish equipment when so altered without reference to illustrations or specifications used. TrynEx International or the vehicle manufacturer may require or recommend optional equipment for snow removal. Do not exceed vehicle ratings with a snowplow. TrynEx International offers a limited warranty for all equipment and accessories. See separately printed page for this important information. The following are registered (®) or unregistered (™) trademarks of Douglas Dynamics, LLC: Automatixx®, POWER PLOW™, SECURITY GUARD™, SnowEx®.

Printed in U.S.A.